Loox

HÄFELE

LED 2007

833.74.050
833.74.051
833.74.060
833.74.061

12 V System	K	W	T_A	mm	mm	~ =
833.74.050	3400 K	2.2 W	–20 °C – +35 °C –4 °F – +95 °F	561 x 12 x 15	≥ 571 x 22 x 25	833.74.900 833.74.901
833.74.051		3.4 W		861 x 12 x 15	≥ 871 x 22 x 25	
833.74.060	blue	2.1 W		561 x 12 x 15	≥ 571 x 22 x 25	
833.74.061		3.2 W		861 x 12 x 15	≥ 871 x 22 x 25	

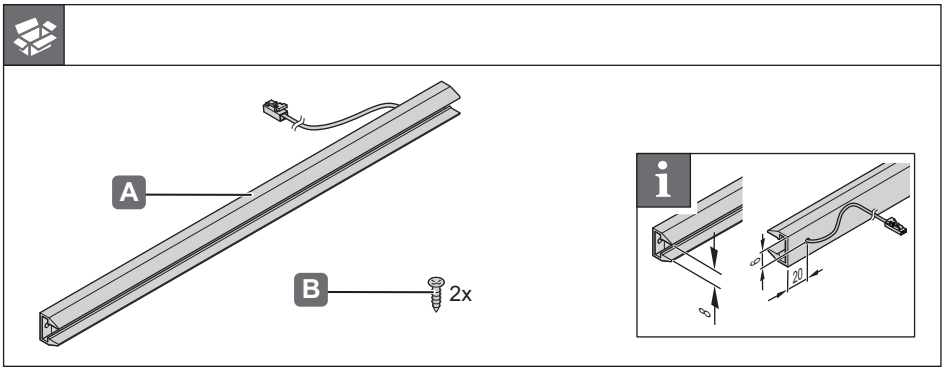

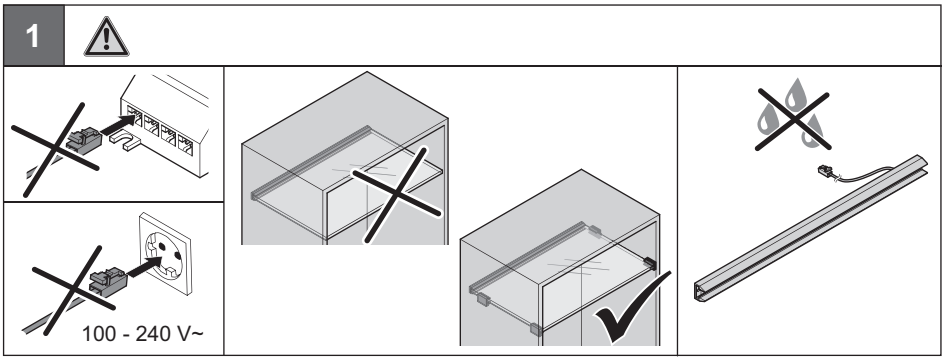

Maße in mm – Dimensions in mm – Dimensions en mm – Medidas en mm

HDE 14/12/2010

732.28.205

RoHS IP20

2

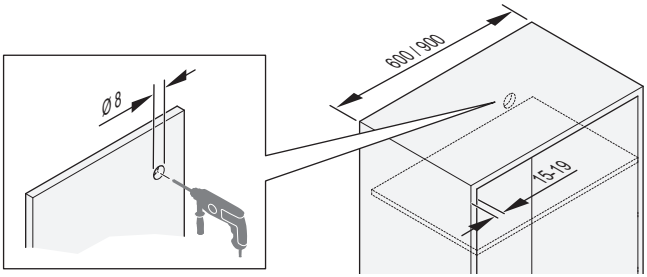

3

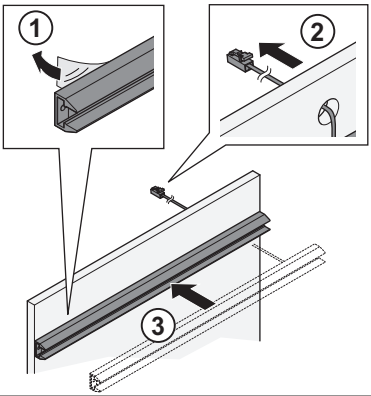

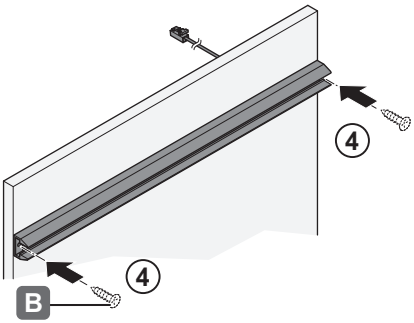

4

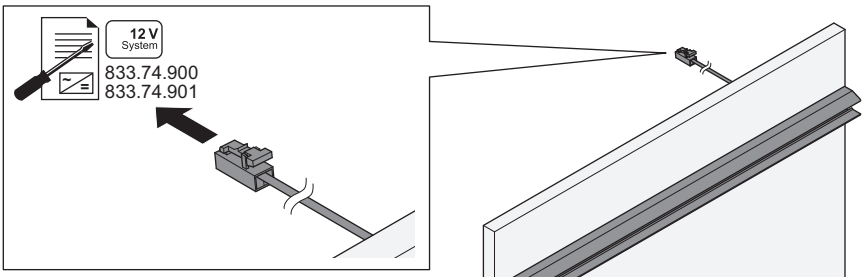

Maße in mm – Dimensions in mm – Dimensions en mm – Medidas en mm

HDE 14/12/2010

732.28.205

Subject to changes

© 2010 by Häfele GmbH & Co KG
Adolf-Häfele-Str. 1 · D-72202 Nagold · www.hafele.com